CLASSIC Water
140 24 N

Functions
- Self-optimising temperature controller
- Display in °C or °F and l/min or gal/min
- Digital flow display and monitoring
- Automatic temperature monitoring
- Heaters switchable in stages
- Display of system and flow pressure
- Automatic water filling
- Automatic mould draining with compressed air
- Automatic venting
- pressure relief
- leak stopper device

Construction
- Proven pump with mechanical seal
- Indirect and direct cooling
- Limescale-free heat exchanger
- Corrosion-resistant device for a long service life
- All parts in contact with water are made of stainless steel or bronze
- Device on castors

Safety features
- Level control as dry-running protection
- Electronic temperature limitation and monitoring in the controller
- Mechanical safety thermostats
- Visual and acoustic error indications
- Integrated circuit breakers
- Main switch, transformer and motor protection switch



Pump performance

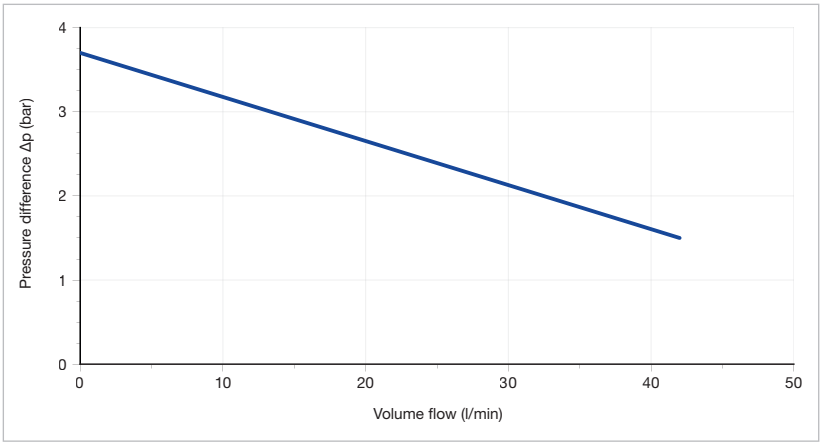

Cooling capacity

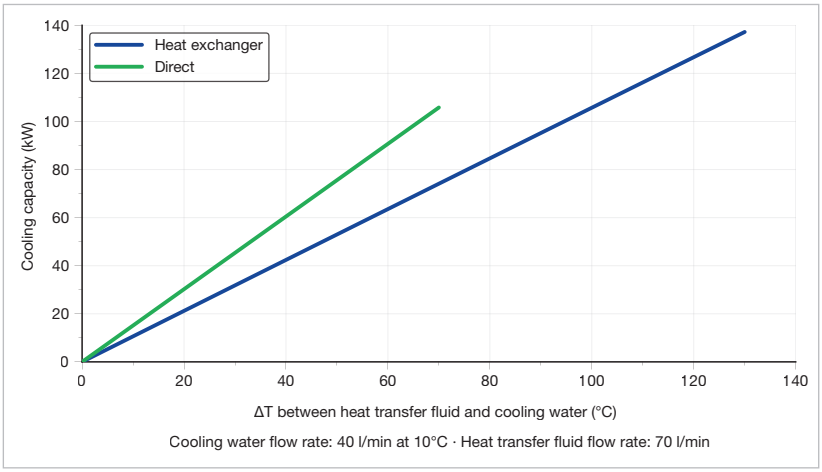

Cooling water flow rate: 40 l/min at 10°C · Heat transfer fluid flow rate: 70 l/min

Fluidic diagram

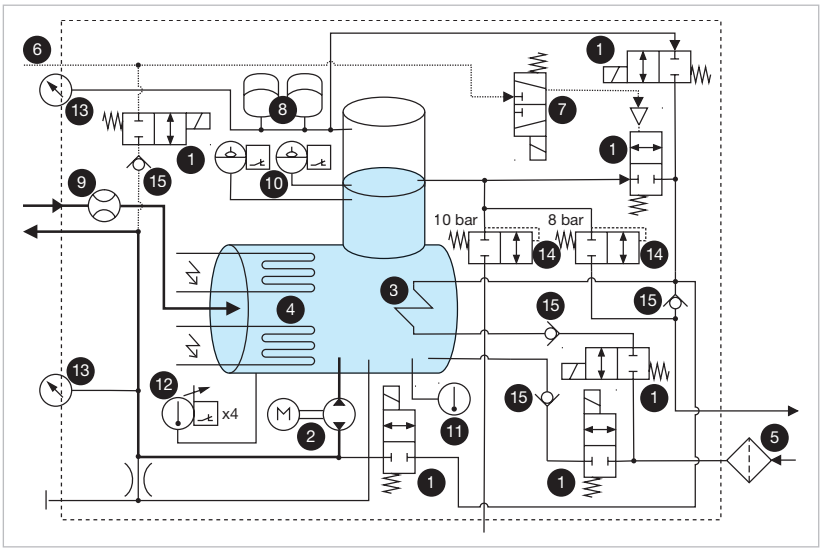

1 2-2 way valve (normally closed), **2** pump with reversible pumping direction, **3** cooling coil, **4** heating element, **5** filter, **6** compressed-air supply, **7** pilot valve for pneumatic 2-2 way valve, **8** expansion vessel, **9** flow sensor, **10** level sensors, **11** temperature sensor, **12** thermostat, **13** pressure gauge, **14** pressure-relief valve, **15** check valve

Technical data

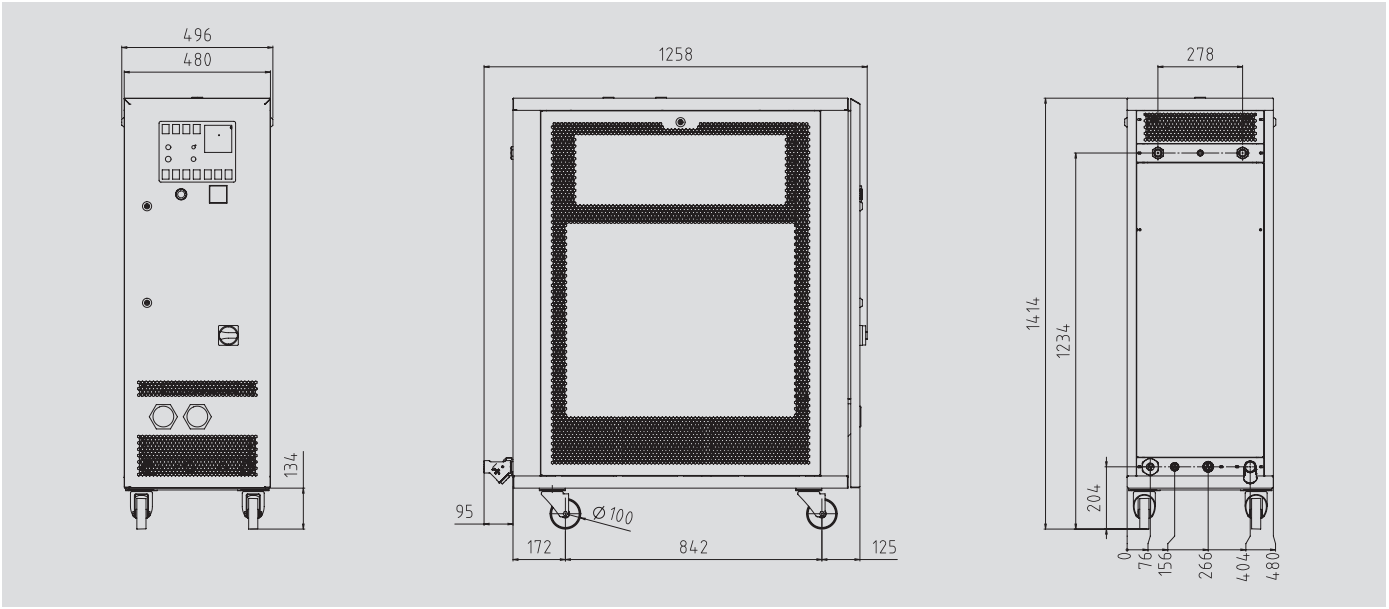

	Water
Maximum temperature	**140 °C**
Heat output	**24 kW**
Cooling capacity	See diagram
Pump	**Type N**
Pressure and flow rate	See diagram
Motor rated power	1.5 kW
Control system	MP-888
Temperature measurement	Temperature sensor FeKo type J
Pump-pressure measurement	Pressure gauge
Flow measurement (heat transfer fluid)	Impeller wheel sensor with inductive pick-up
Connections	
Heat transfer fluid (feed and return)	¾" BSPP (G¾) female thread
Cooling water inlet	1" BSPP (G1) female thread, with water filter
Cooling water outlet	1" BSPT (R1) male thread
Compressed air	¼" BSPP (G¼) female thread
Empty weight	180 kg
Colour	RAL 7035 light grey
Surroundings	
Temperature range	5-40 °C
Relative humidity	40–80% RH (non-condensing, no ice formation)
Installation	Inside, ventilation openings must be at least 10 cm clear
Continuous sound pressure level	< 70 dB(A)
Power supply	380–415 V, 50 Hz/440–480 V, 60 Hz/380 V, 60 Hz/200–230 V, 50 Hz/200–240 V, 60 Hz
Connected load	25.6 kW
Conductor cross-section of connection cable	
200-240 V	25 mm²
380-480 V	10 mm²
Protection class device	IP44
Labeling	CE